griffin analytical

Implementation of DART and DESI Ionization on a Fieldable Mass Spectrometer

Mitch Wells, Mike Roth, Garth Patterson

Griffin Analytical Technologies, LLC

West Lafayette, IN

September 19th 2007, 6th Harsh Environement Mass Spectrometry Workshop, Cocoa Beach FL

NEW THREATS.
NEW THINKING.

Griffin - Overview

Timeline:

- Founded in 2001
- Partnered with ICx Technologies in 2006

GRIFFIN ANALYTICAL TECHNOLOGIES → icx griffin analytical

Griffin's Location:

- Purdue Research Park
  West Lafayette, IN USA

Size:

- 10,800 Square Feet
- 41 full time plus 6 part time
- 2/3 staff is technical (scientists and engineers)

Technology:

- Fieldable Mass Spectrometers
- Flexible Inlet Technologies
- Sophisticated Software


Purdue Technology Center


Applications & Testing Center


Production Work Cell


R&D Lab

Griffin Product Family

Griffin Analytical makes fieldable mass spectrometers for the accurate identification of known and unknown chemical threats.

Griffin 300

Griffin 400

Griffin 450

X-Sorber

How can the products be used?

- Force protection
- DoD operations
- Hot zone deployment
- Terrorism threats
- Urban air monitoring
- Environmental monitoring and analysis
- Mobile laboratories
- Site assessments and remediation
- Real-time monitoring
- Emergency response
- Petrochemical troubleshooting
- Quality assurance
- Application and method development
- Research & teaching tool

Griffin Sample Inlet Technology

Ambient Sample – solid, liquid, or vapor at atmospheric pressure (760 Torr)

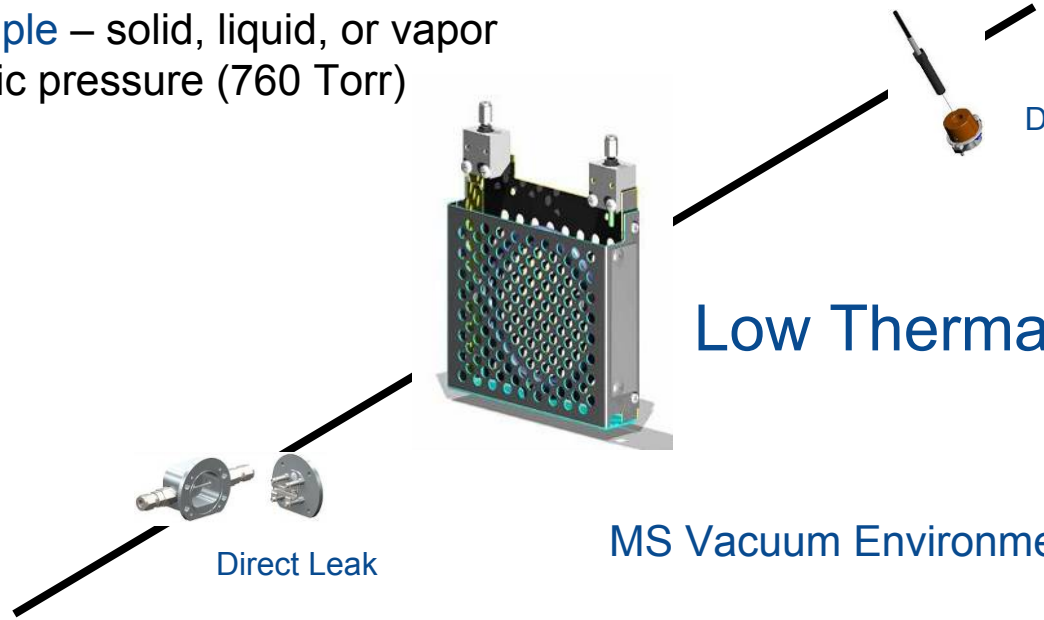

MS Vacuum Environment – 1 x 10^{-4} Torr

New Developments: Atmospheric Pressure Ionization

Griffin R&D projects

- External Ionization – Atmospheric Pressure Ionization

- Alternative to GC for sample introduction to the MS
- Direct sampling and ionization of components in liquids, on surfaces, etc.
- Explosives detection applications
- Premium class **on-site** bioanalytical applications
- **Requires an API interface for the MS**

Electrospray ionization (ESI)

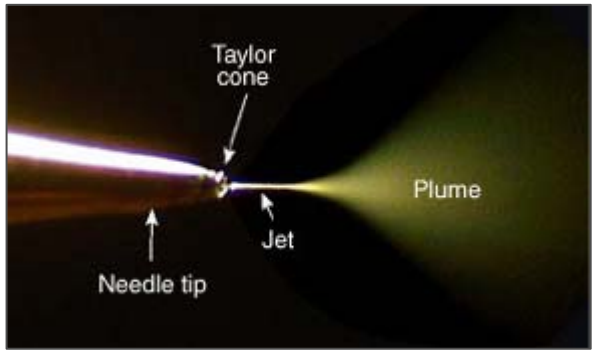

DESI

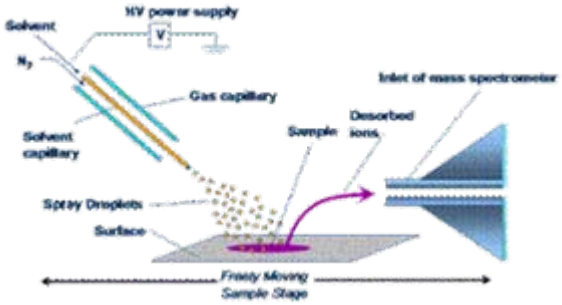

DART

Griffin API Interface

Three stage vacuum system

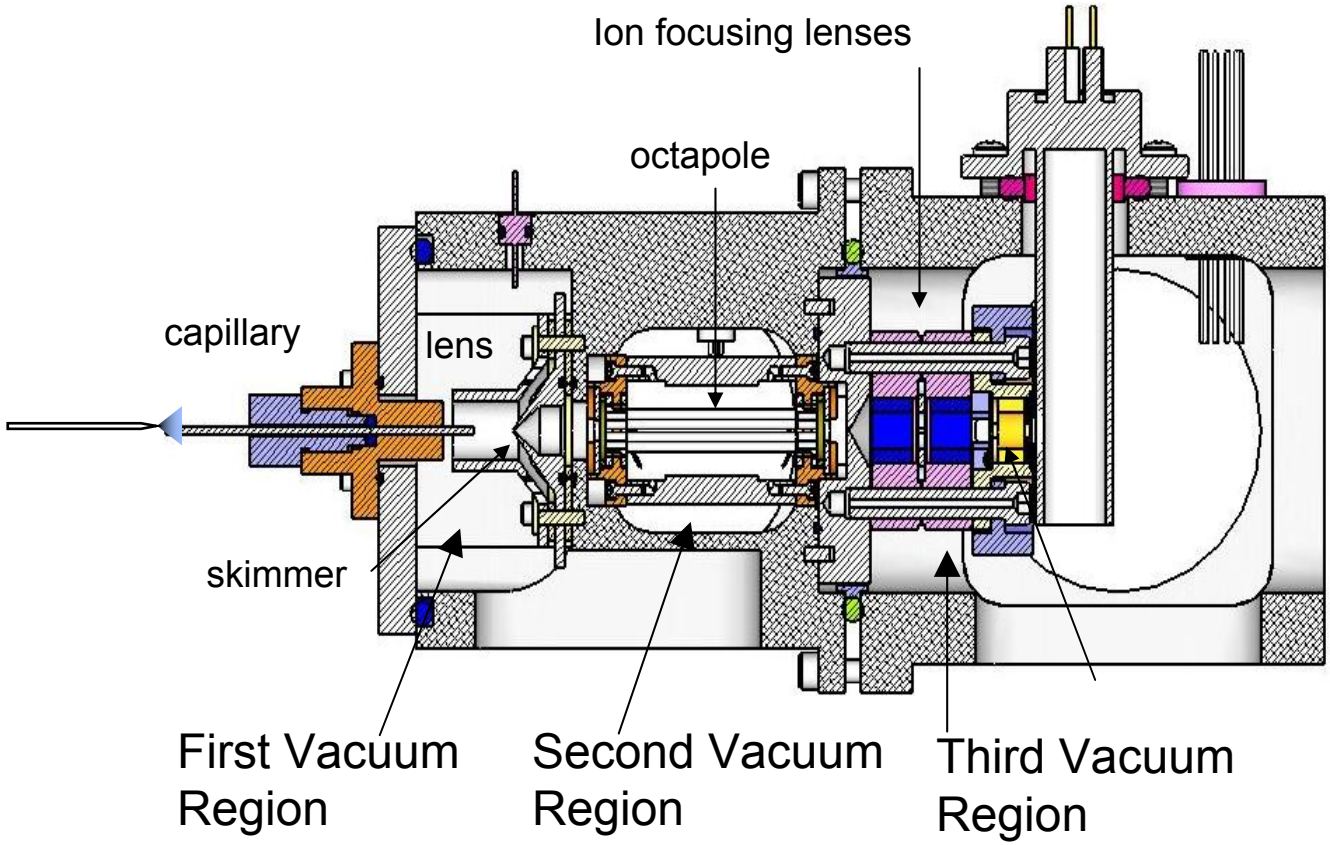

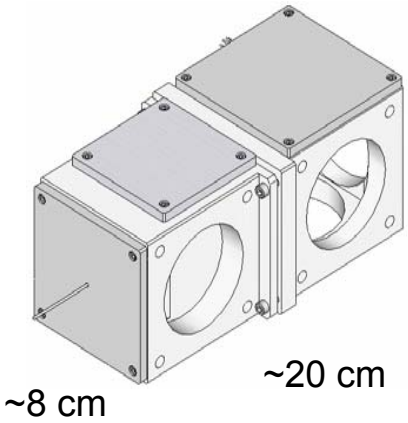

Griffin API Interface

Three stage vacuum system

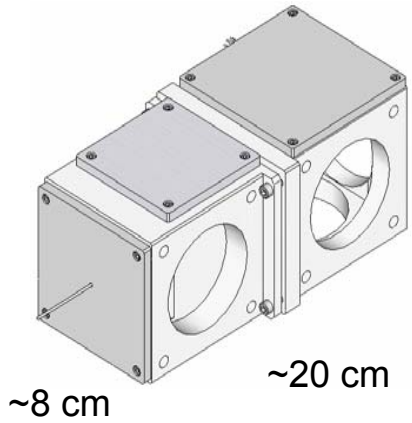

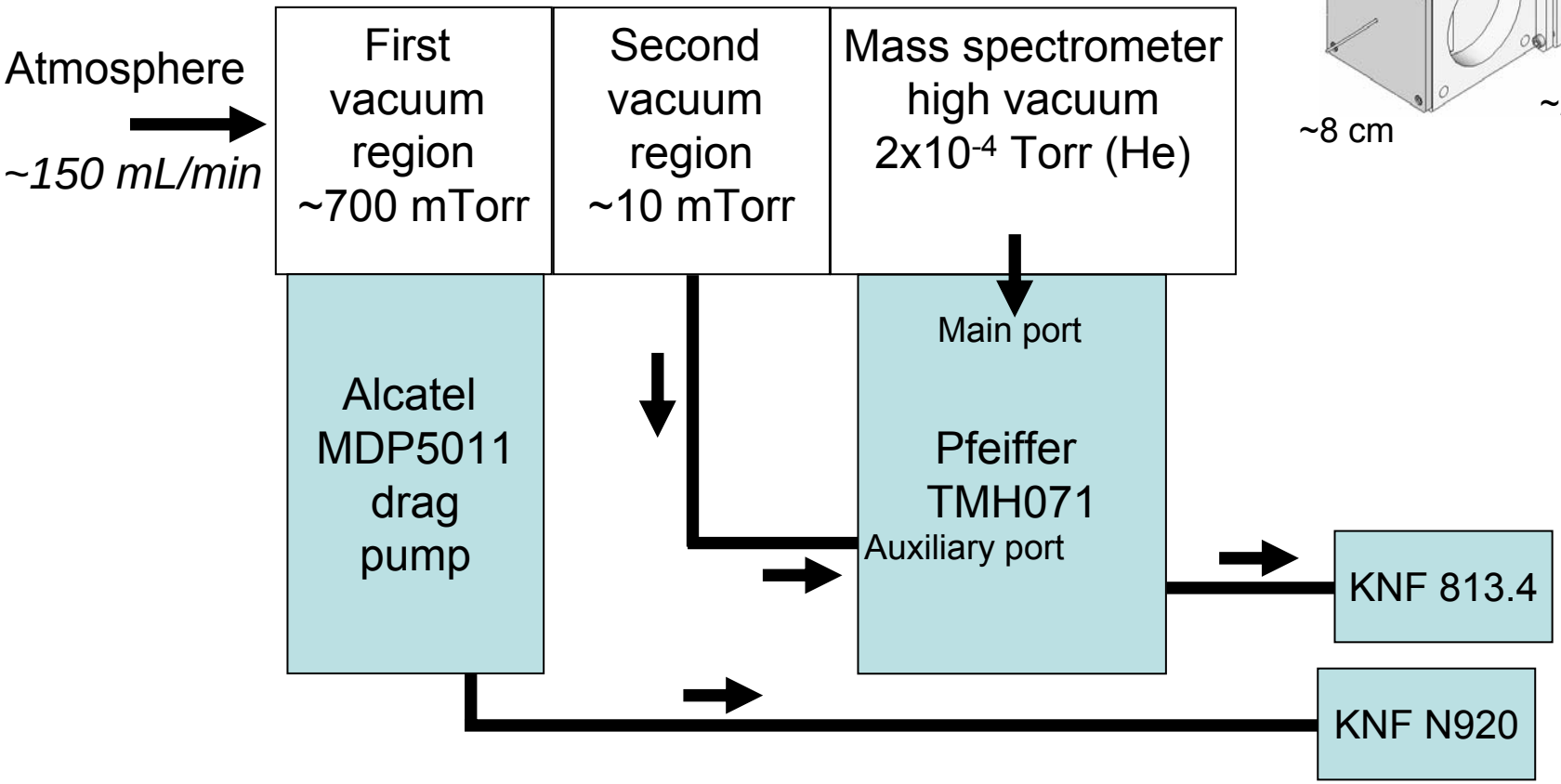

Griffin API Interface

First vacuum region

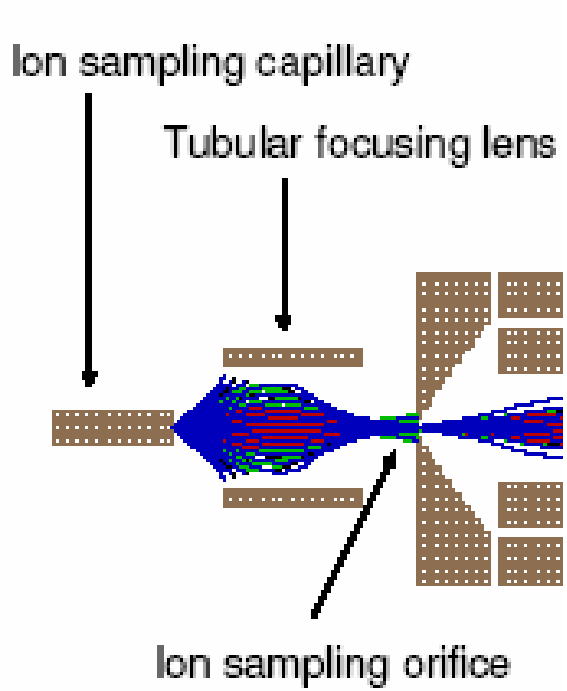

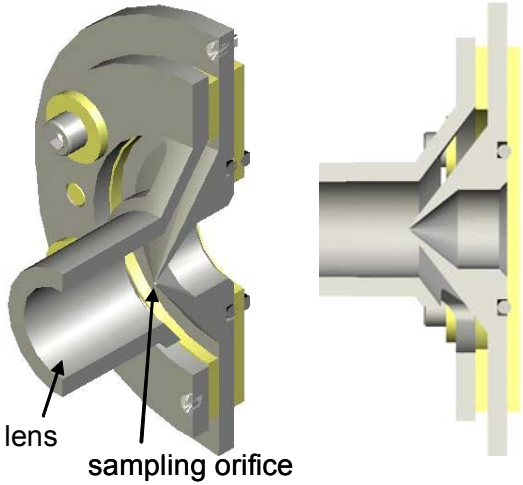

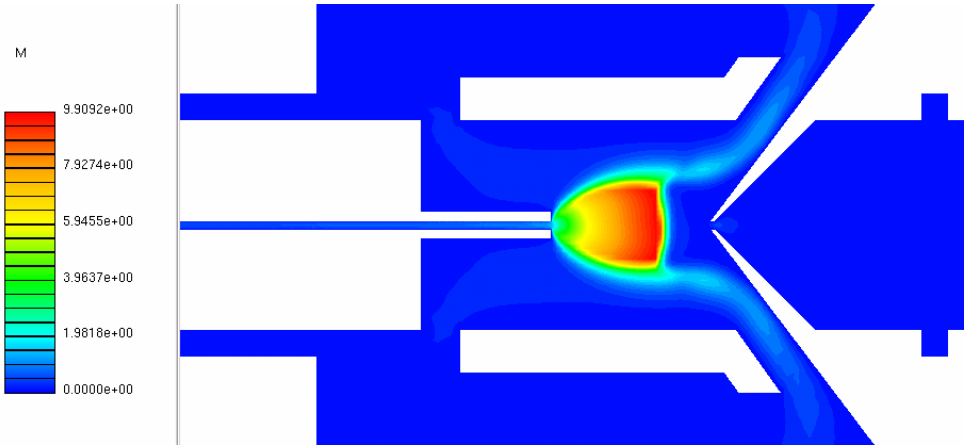

Griffin API Interface

Second vacuum region

a)

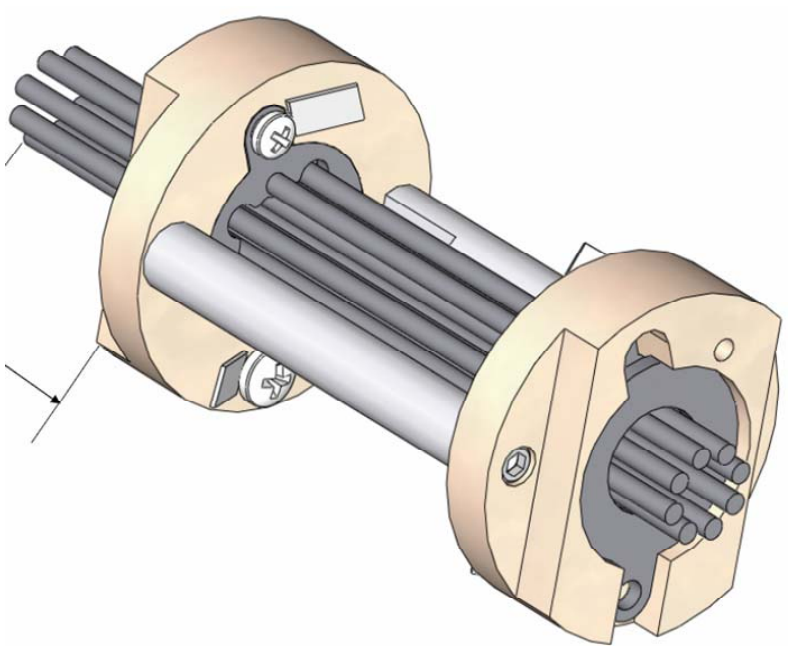

b)

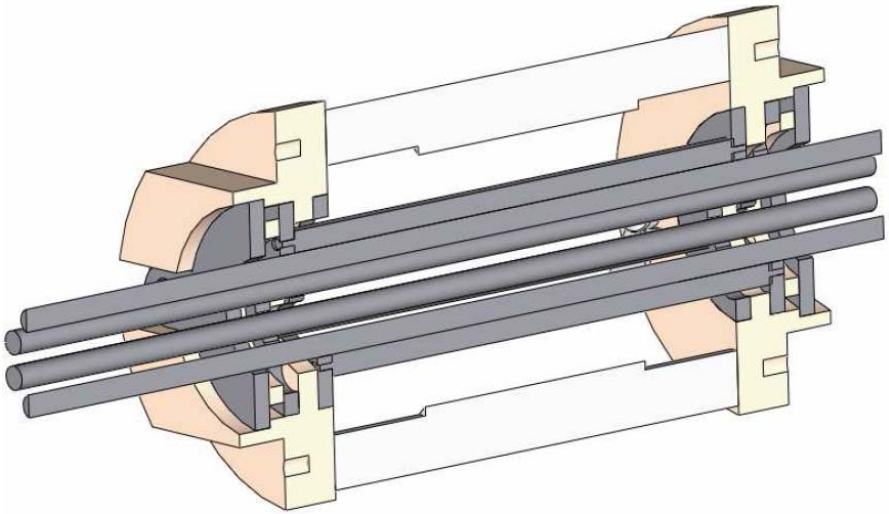

Octapole ion guide with Ardara RF supply

Griffin API Interface

Third vacuum region

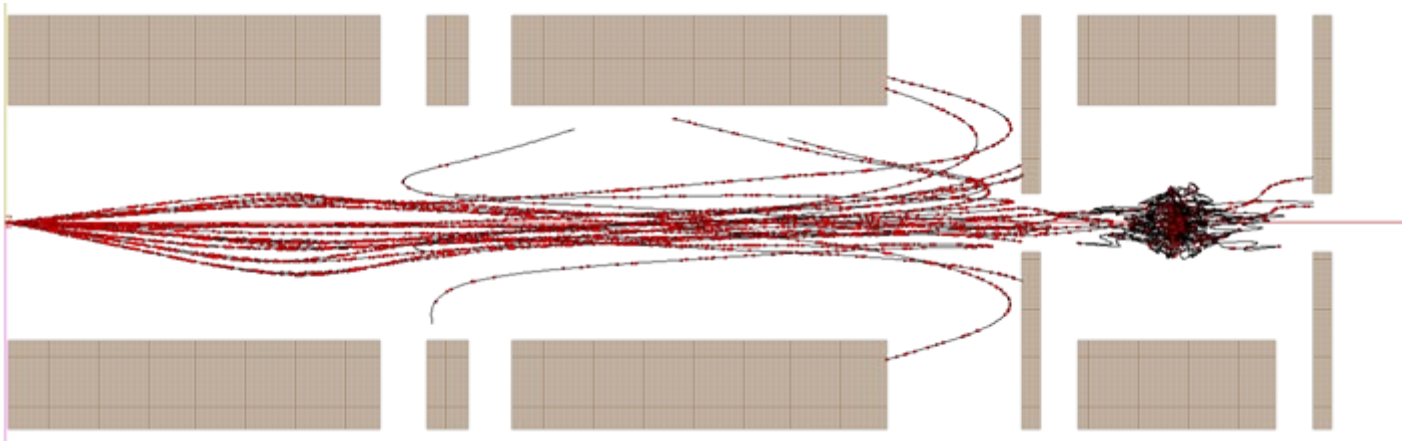

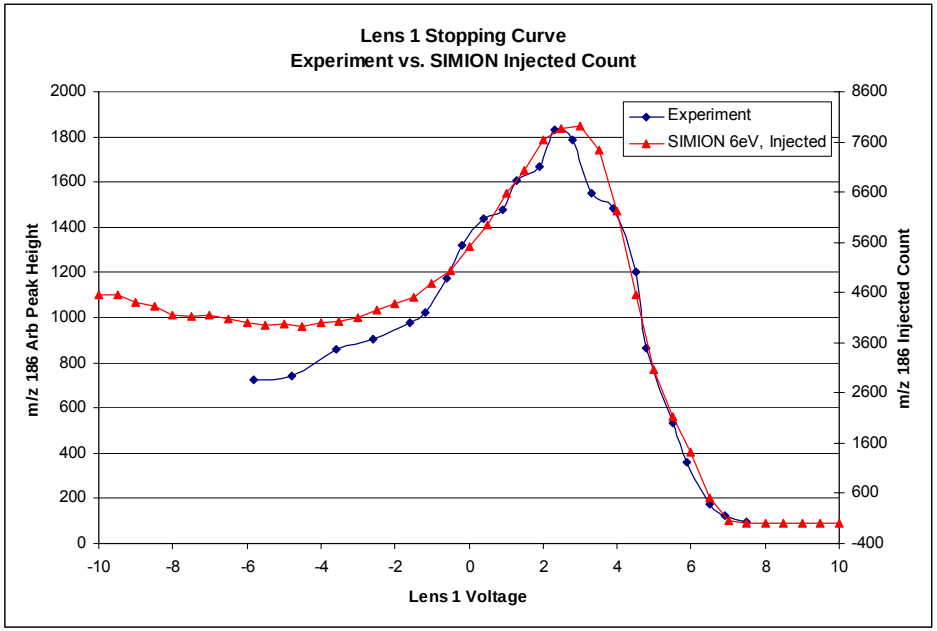

Griffin API Interface

Third vacuum region – RIT simulations

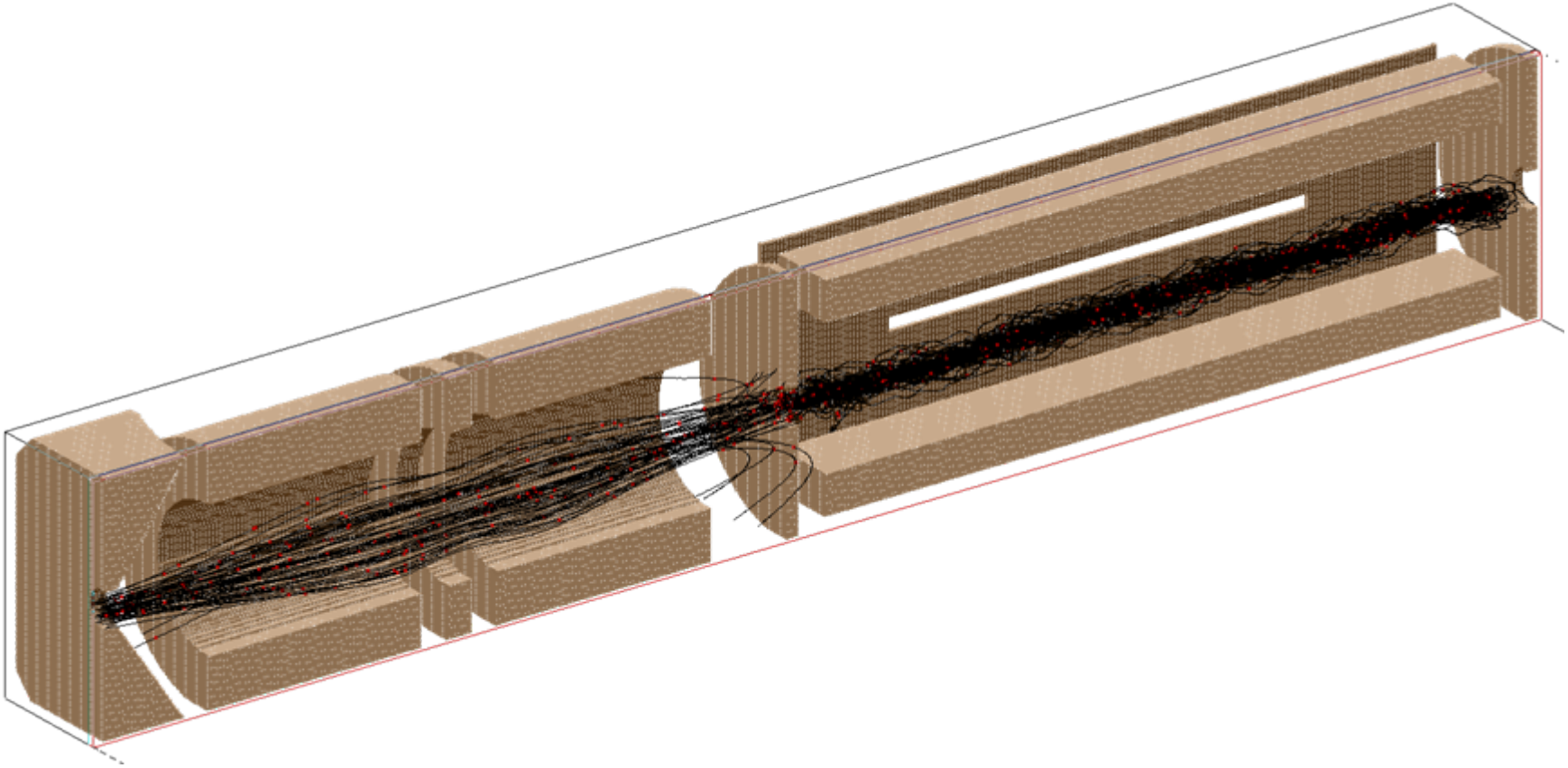

Griffin API Prototype Instrument

a)

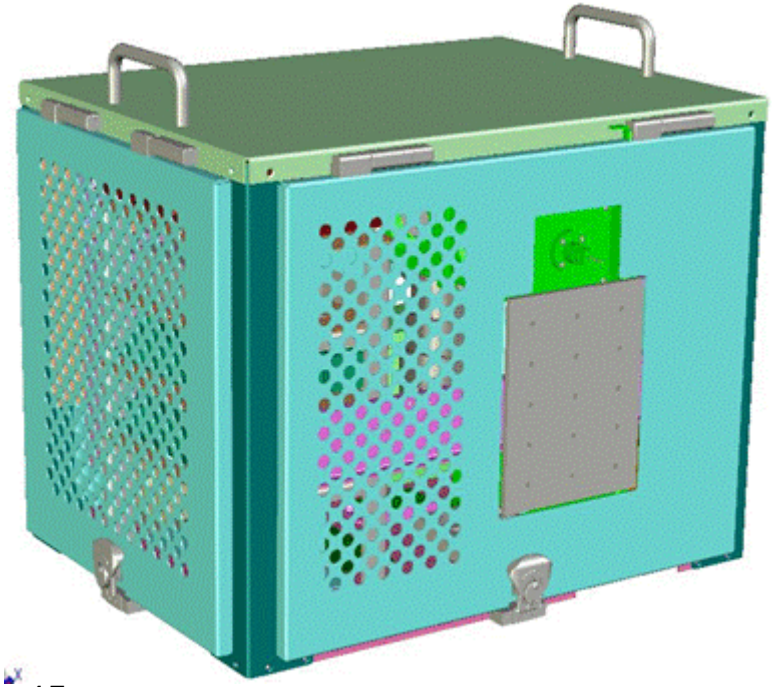

~45 cm

~50 cm

b)

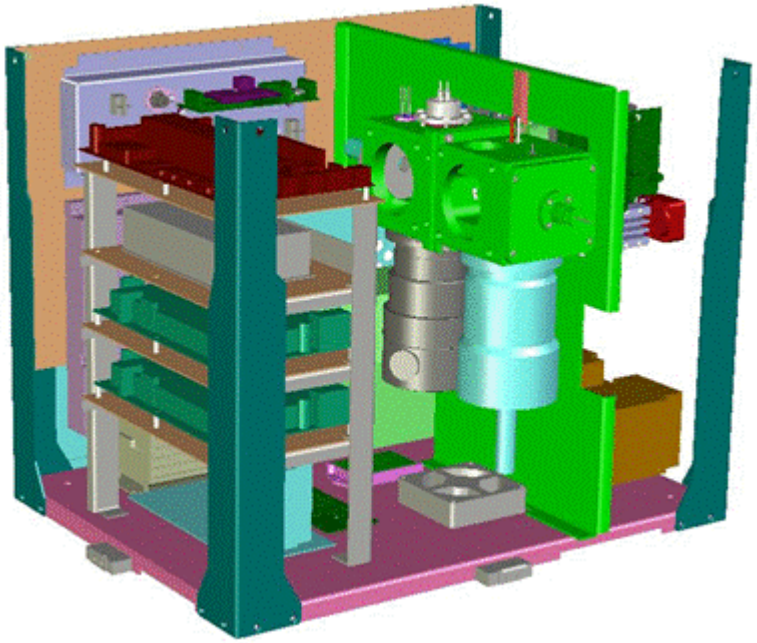

Mass ≈ 45 kg

Griffin ESI – Drugs of Abuse

Electrospray of drug mixture standard

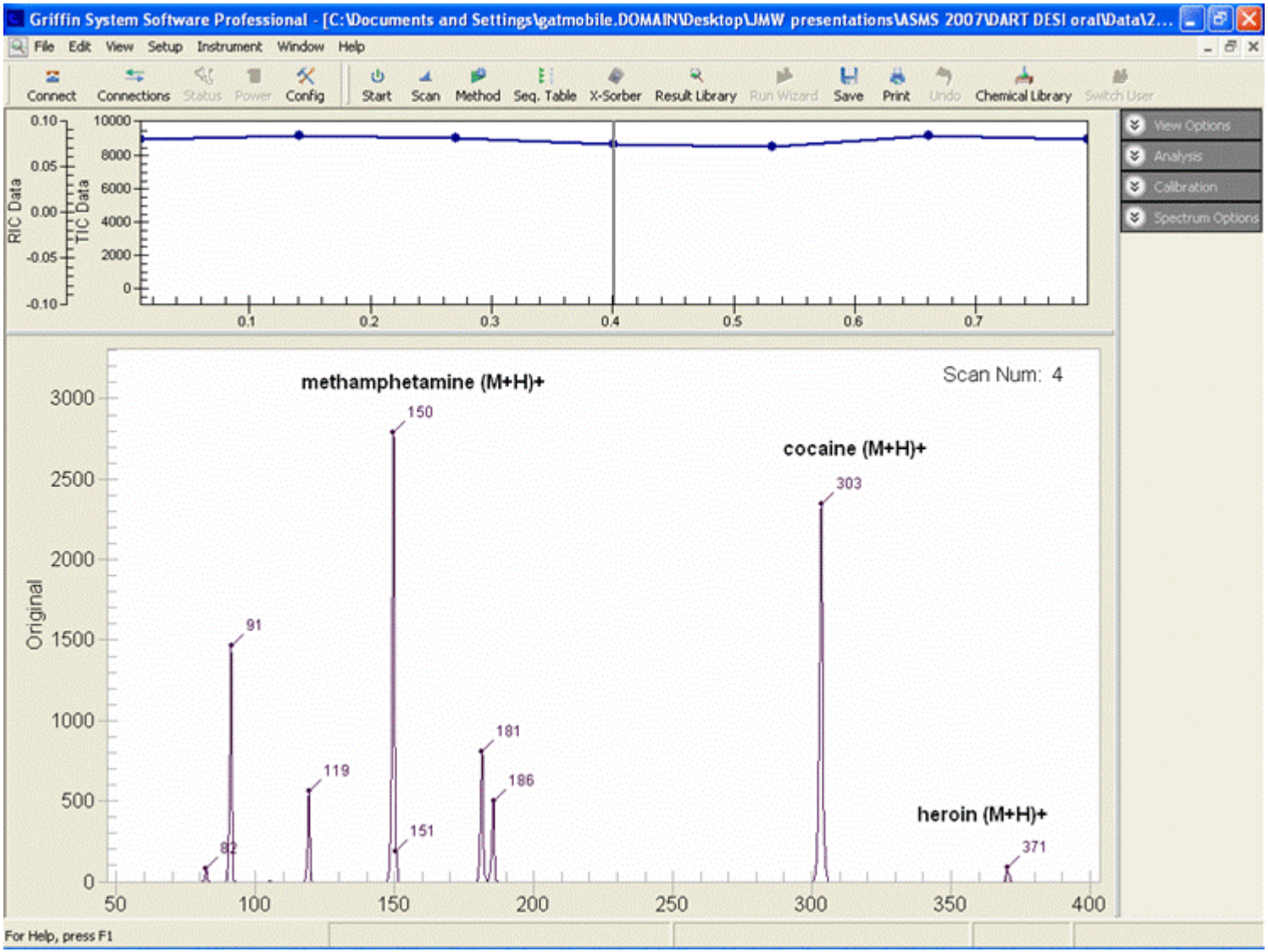

Griffin ESI - Myoglobin

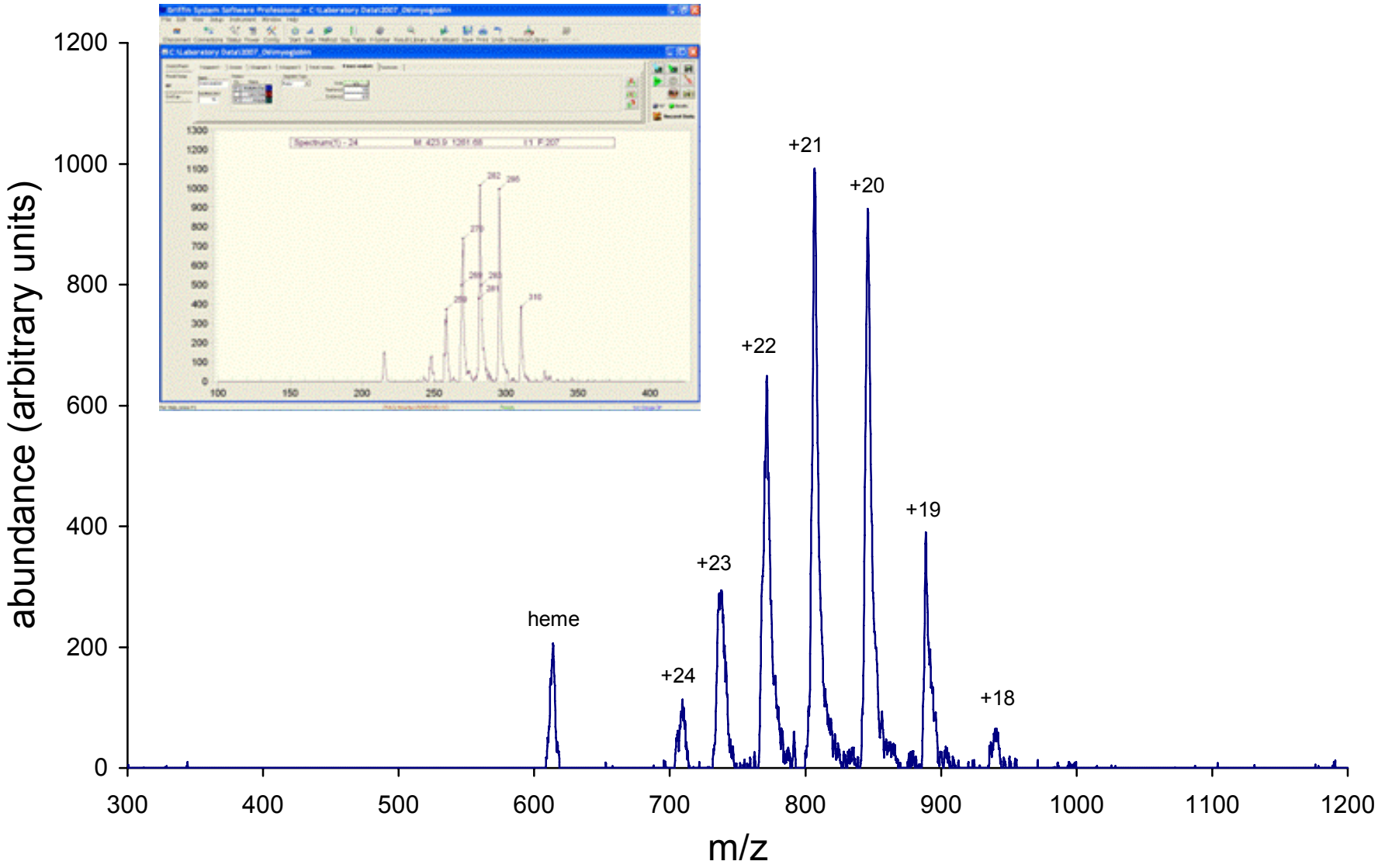

griffin analytical

Griffin ESI – CW Simulants

Electrospray of dimethyl methylphosphonate (DMMP)

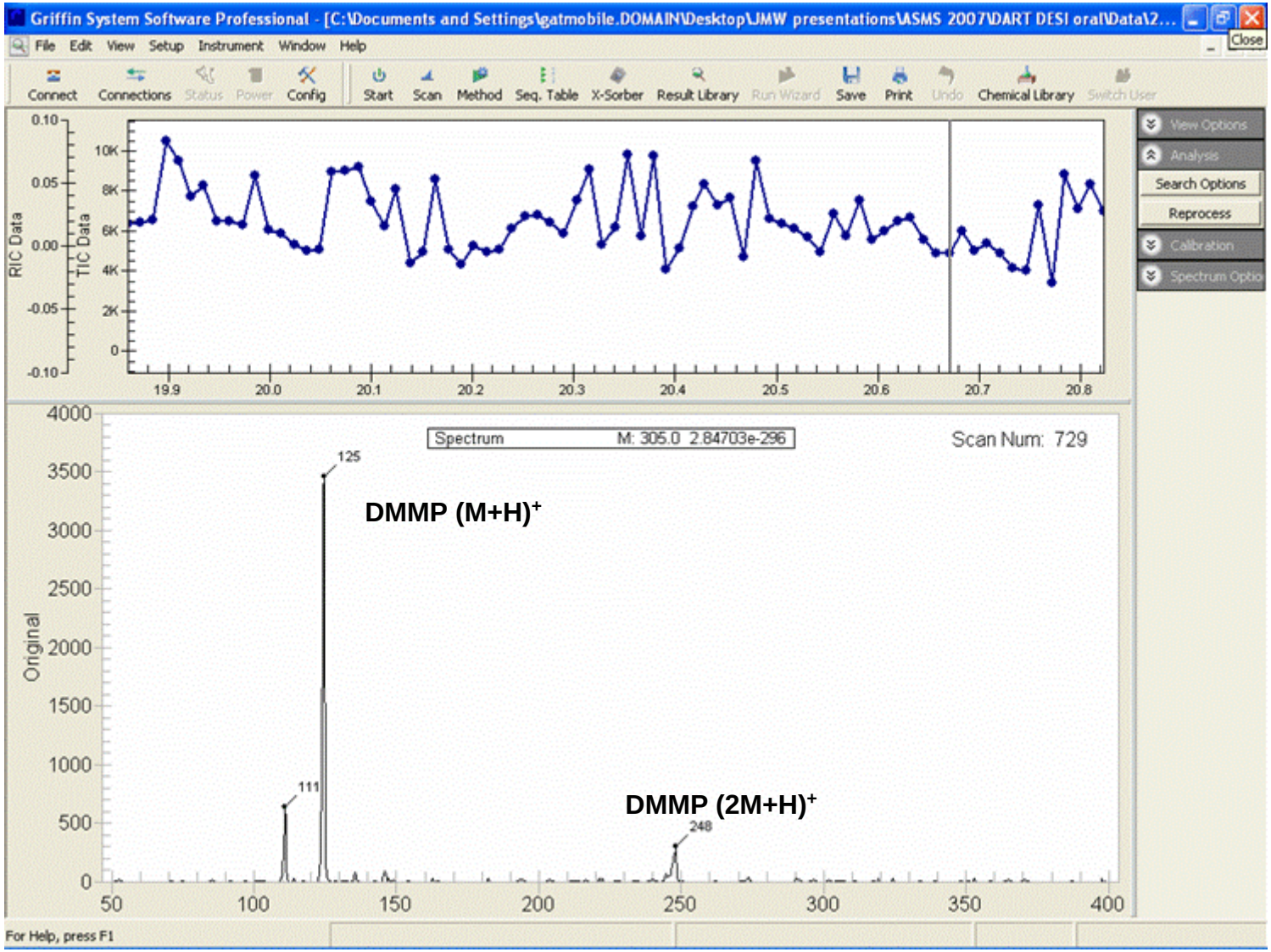

Griffin ESI – CW Simulants

Calibration Curve for DMMP

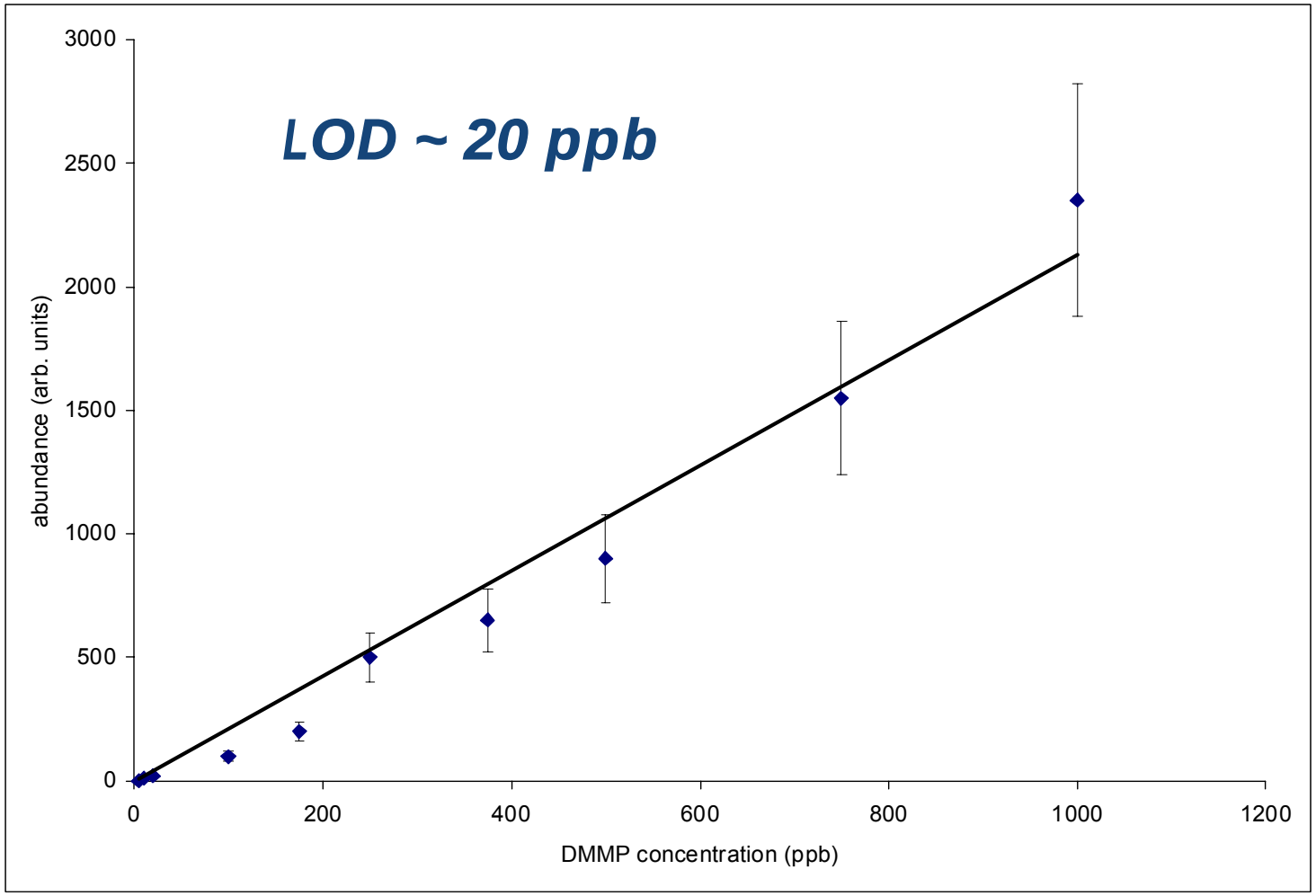

Griffin and DART

Direct Analysis in Real Time (DART)

TNT detected from fingerprints

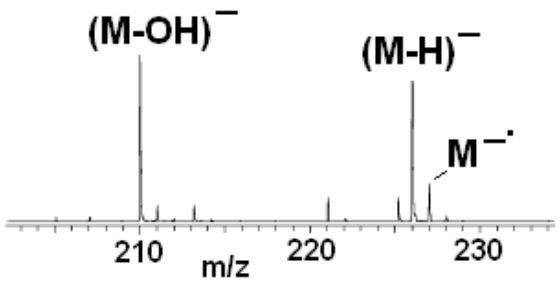

1st fingerprint

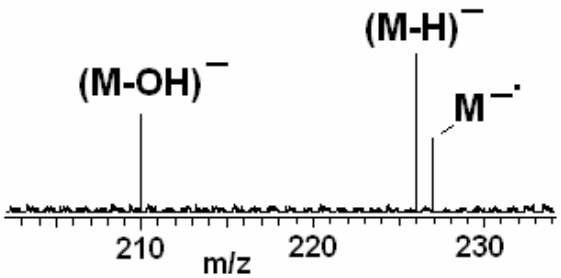

12th fingerprint

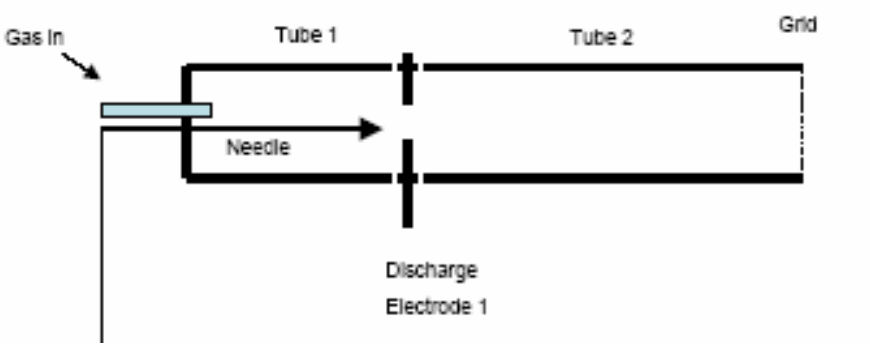

Nitroglycerine detected on a necktie

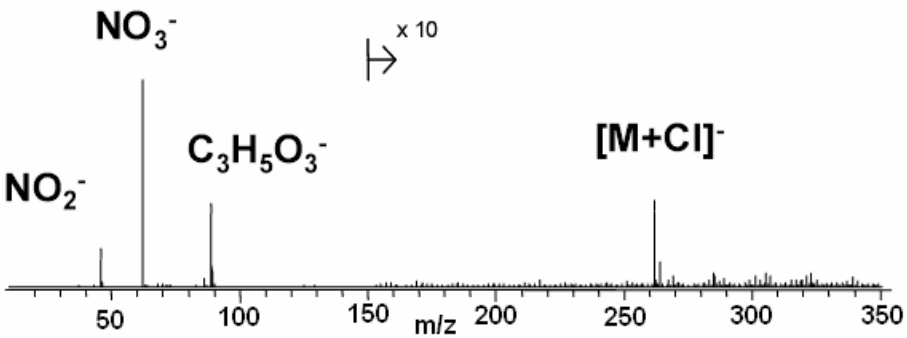

Griffin and DART

IonSense DART source on the Griffin API prototype

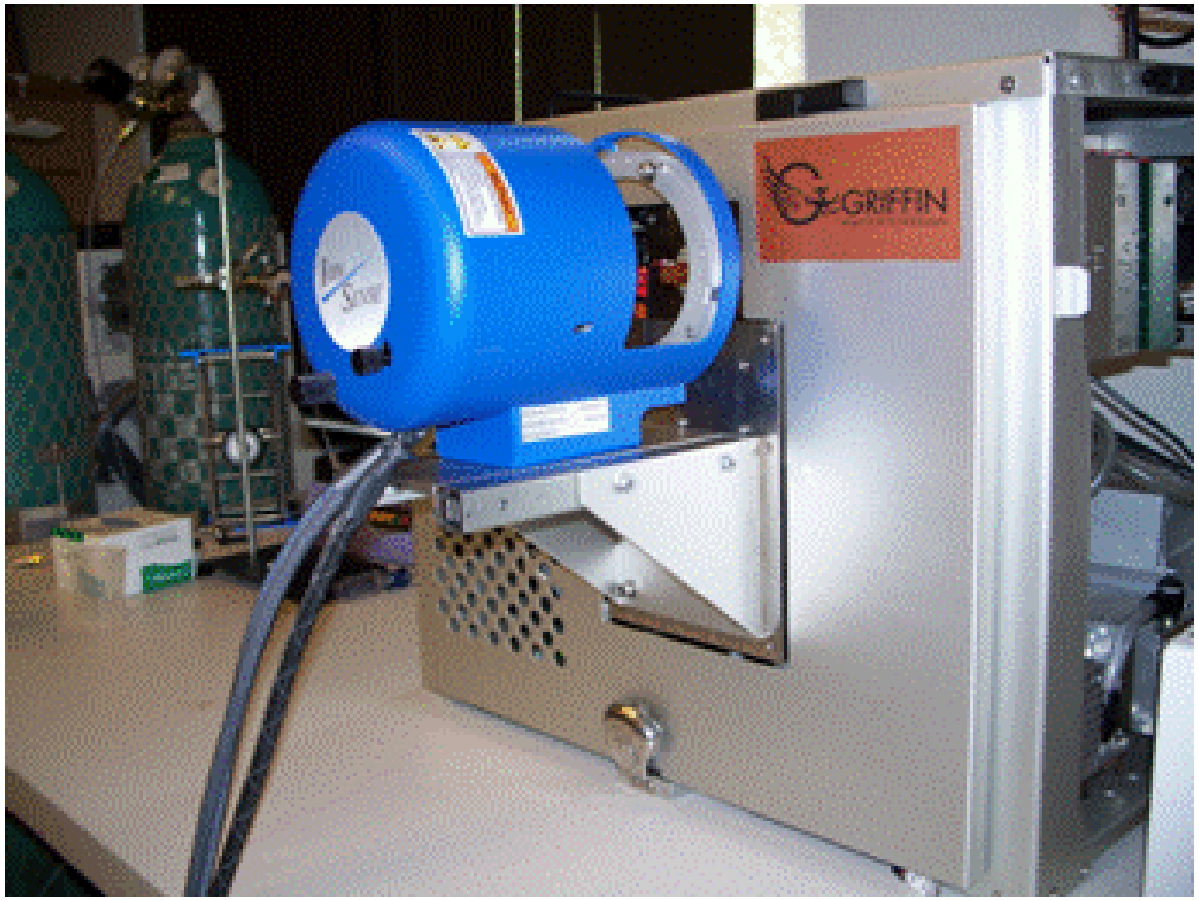

Griffin and DART

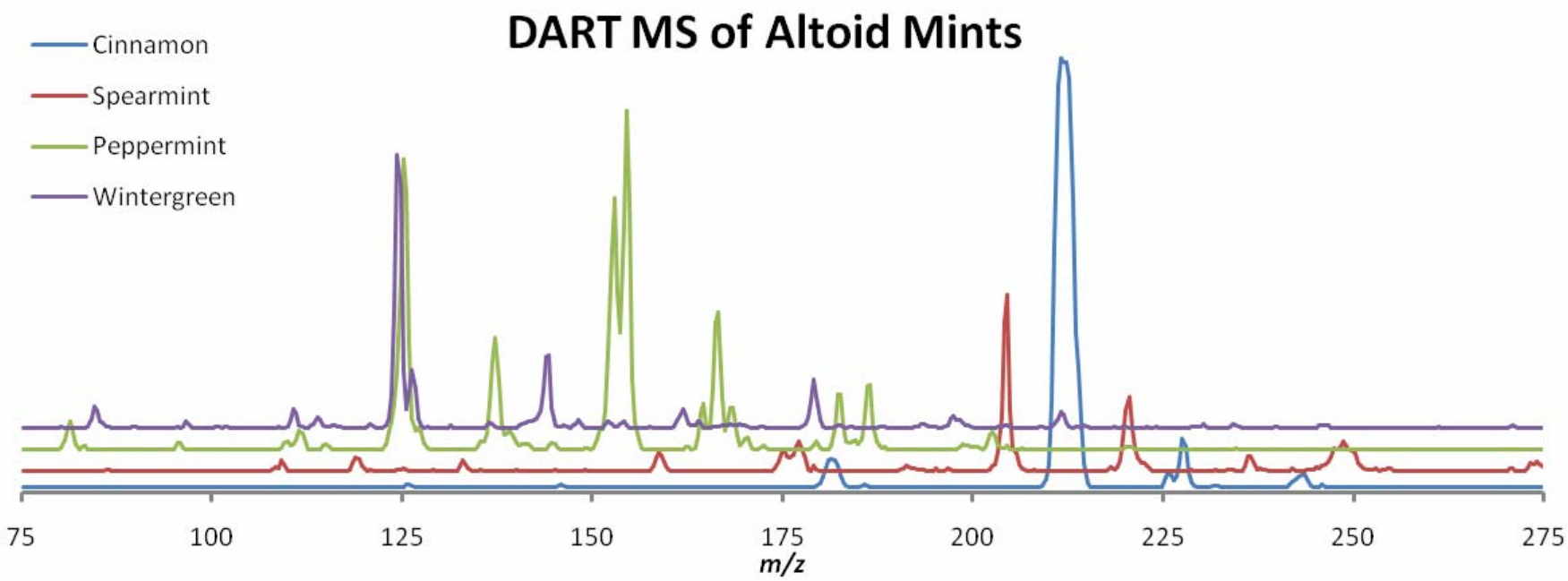

Griffin and DART

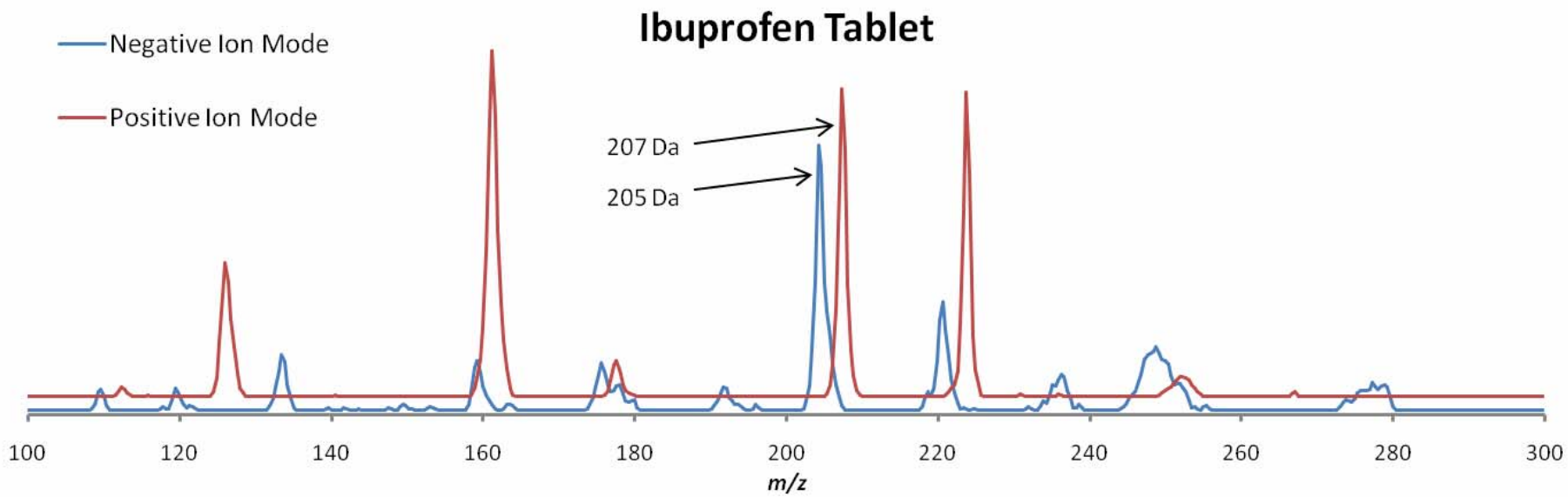

Griffin and DART

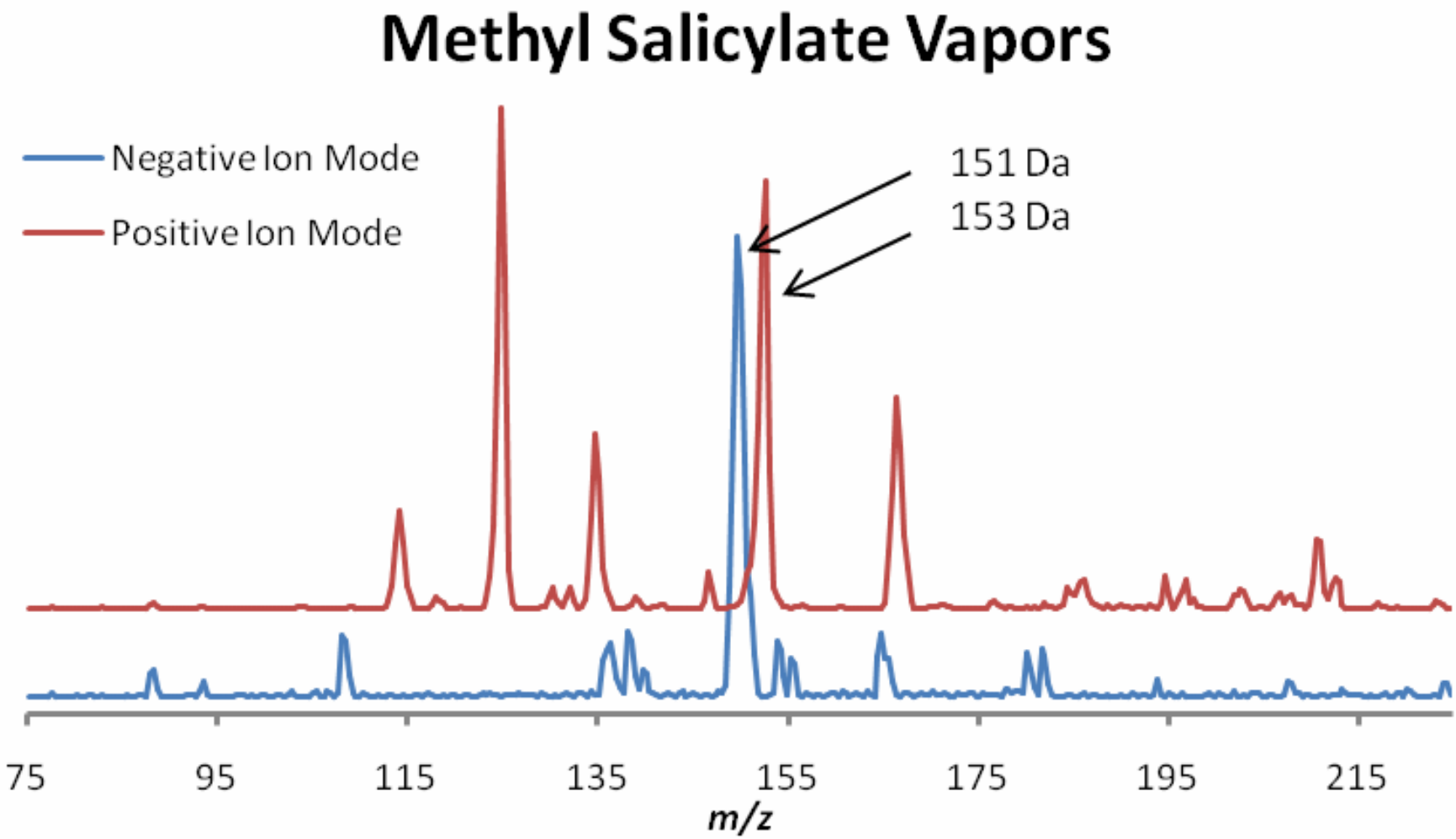

Griffin and DART

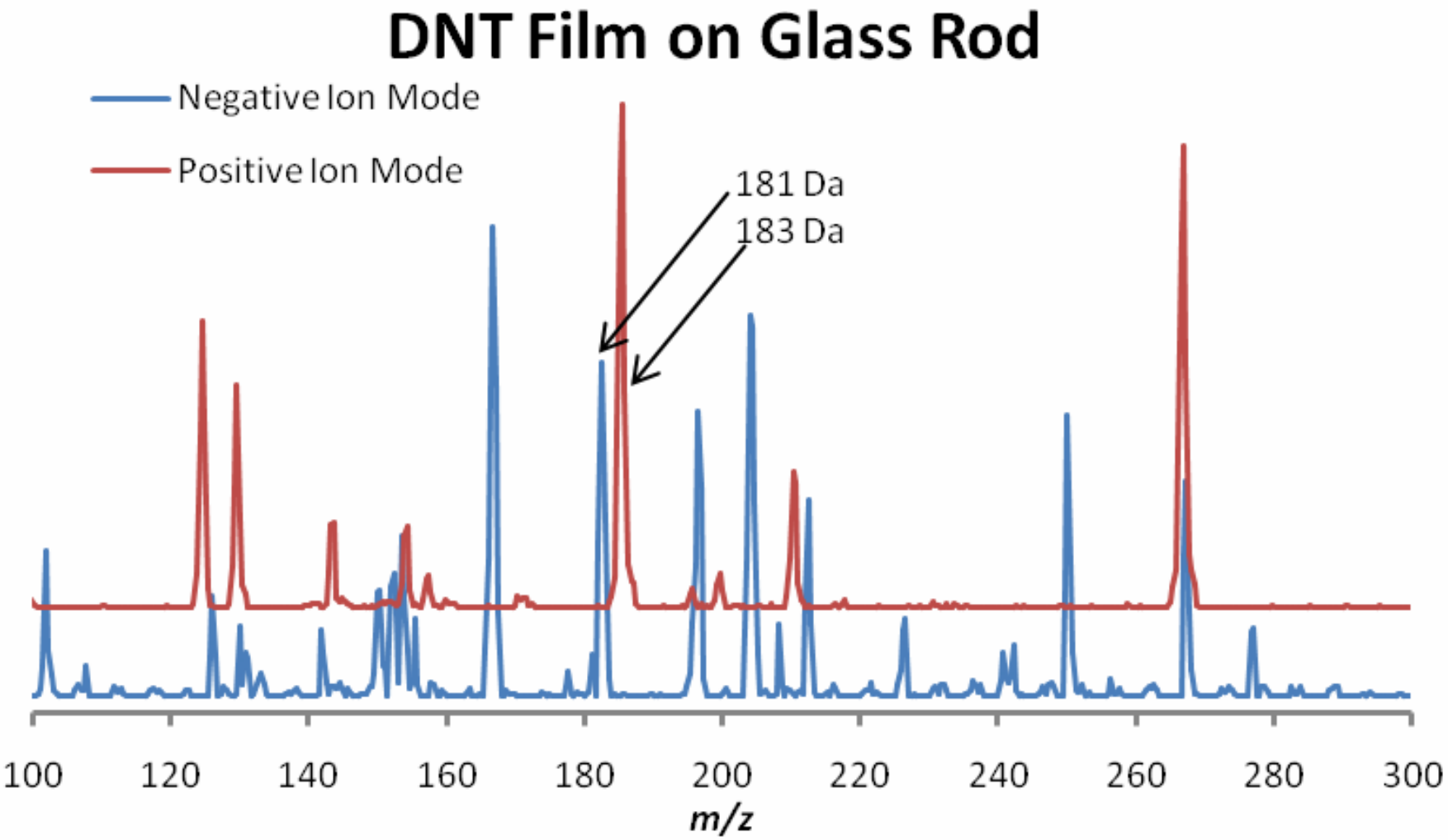

Griffin and DART

Detection of TNT on Paper

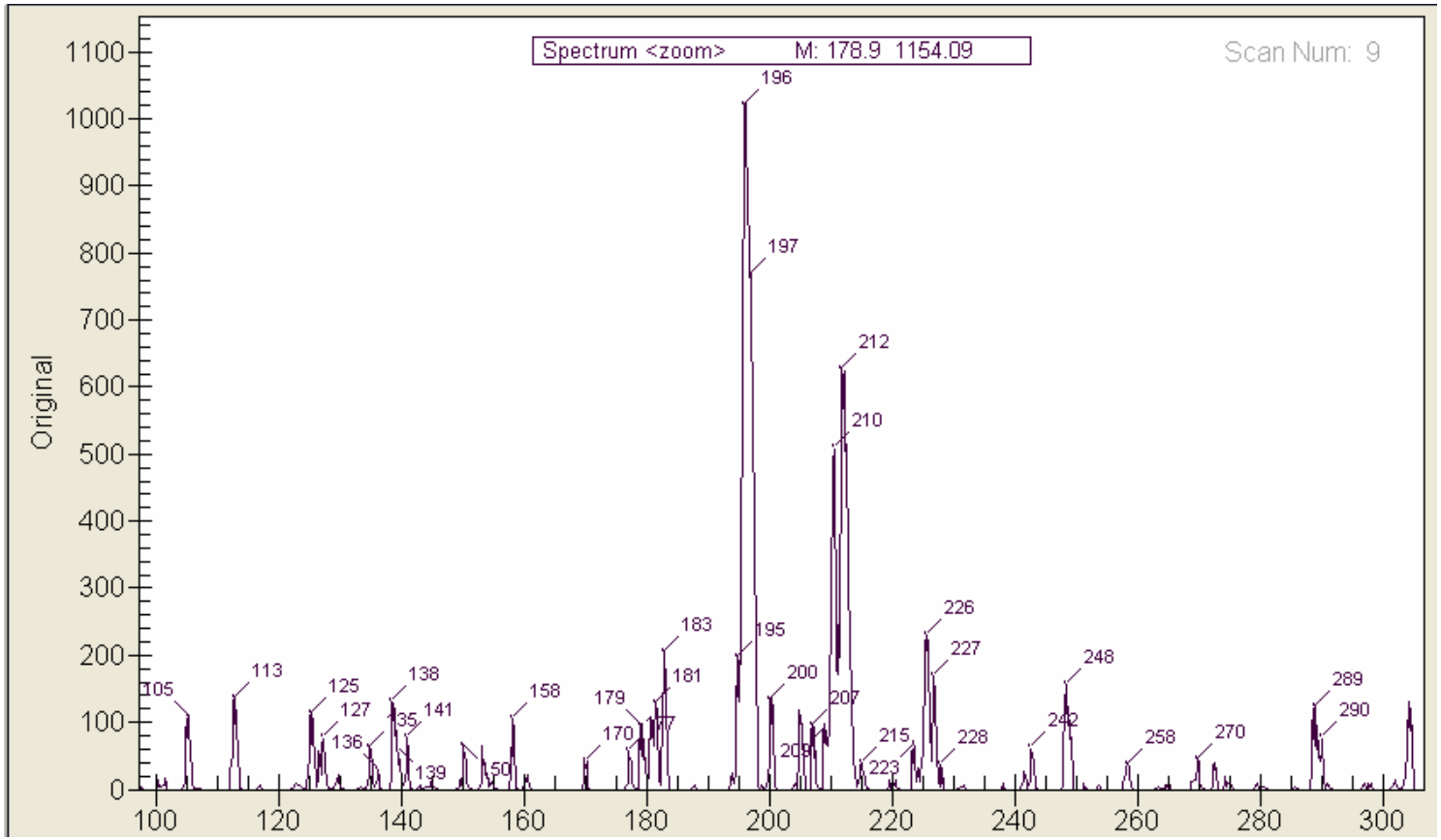

Griffin R&D

griffin analytical

Desorption Electrospray Ionization (DESI)

Prosolia Inc.

PURDUE UNIVERSITY

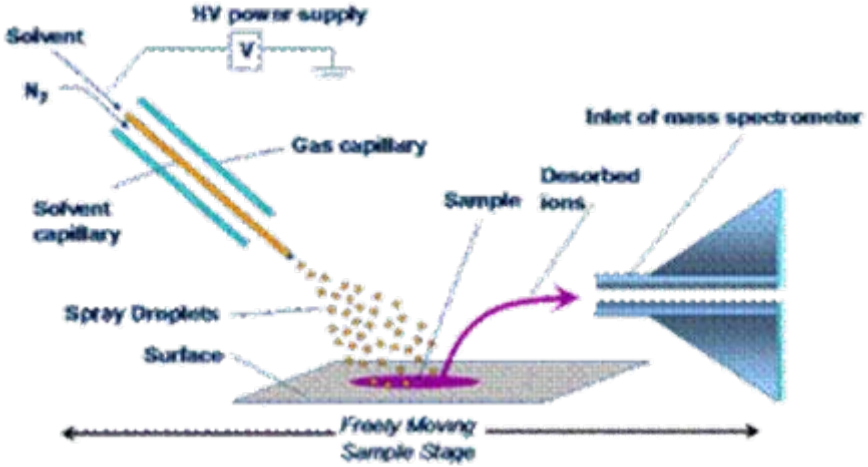

RDX detected on a suitcase handle

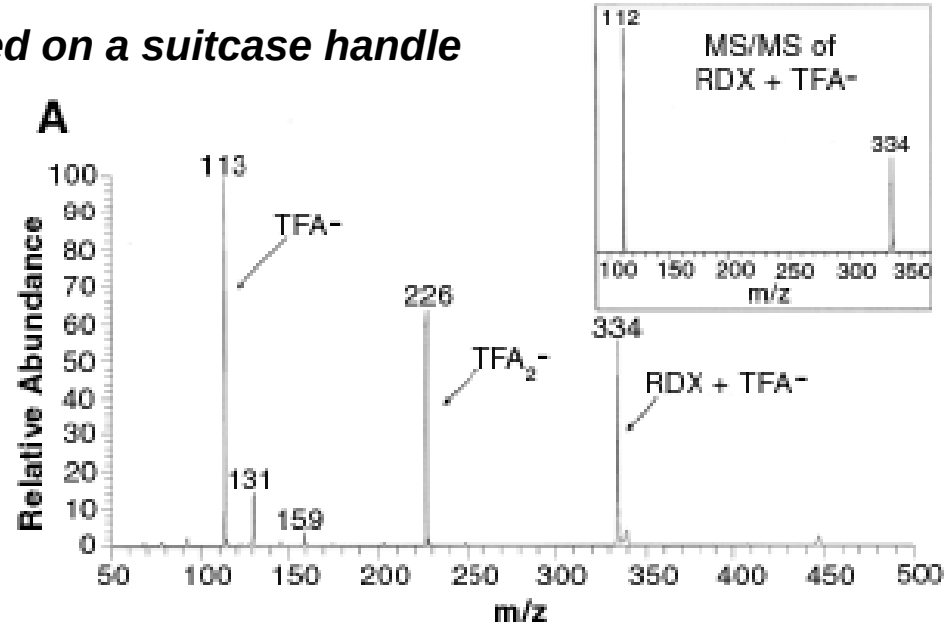

Griffin and DESI – Drugs of Abuse

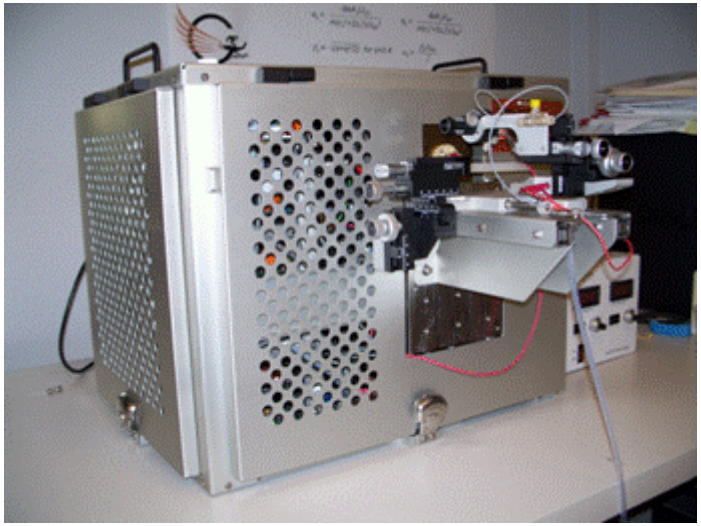

Prosolia OmniSpray® Source on Griffin API prototype

DESI of methamphetamine spotted onto a glass slide

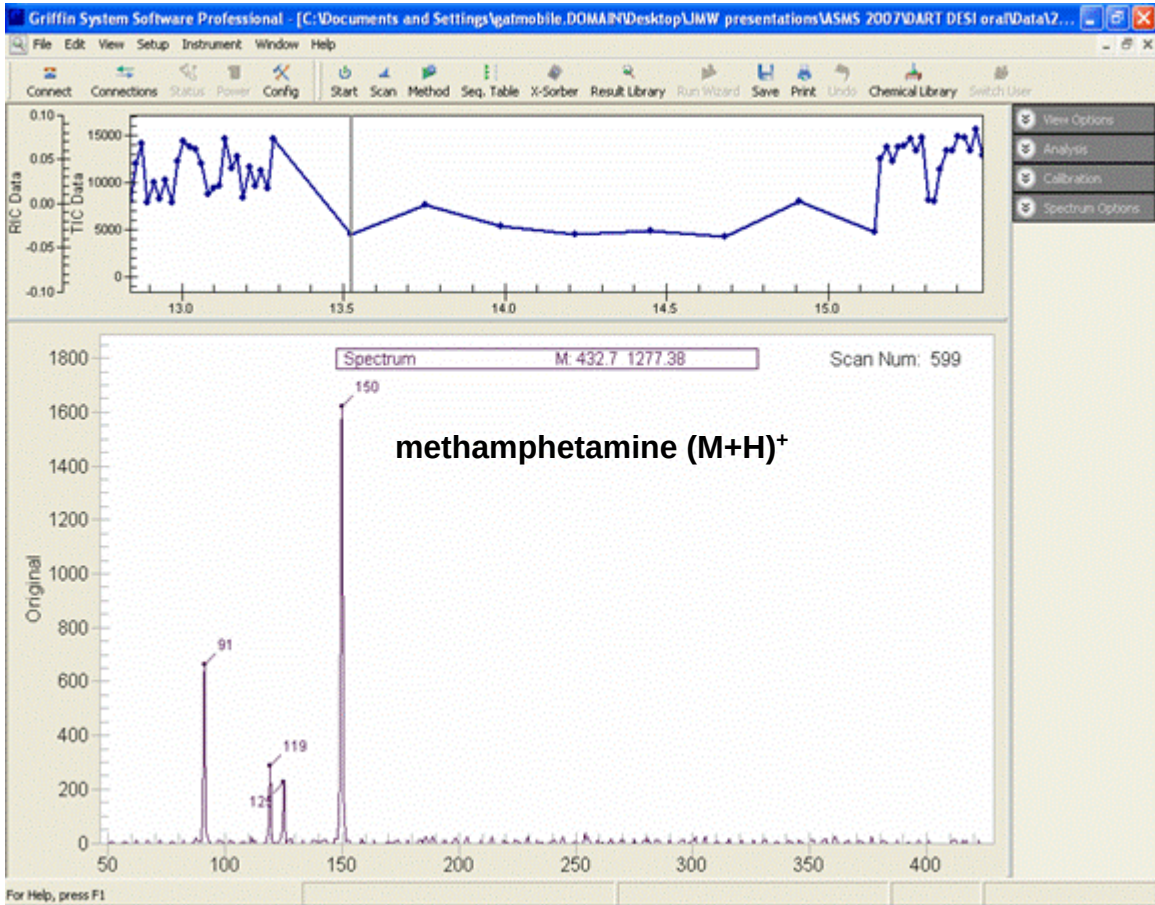

Griffin API future directions

Next prototype

- Installed in a 400 case
- Improved pumping
- Improved ion transmission and trapping

a)

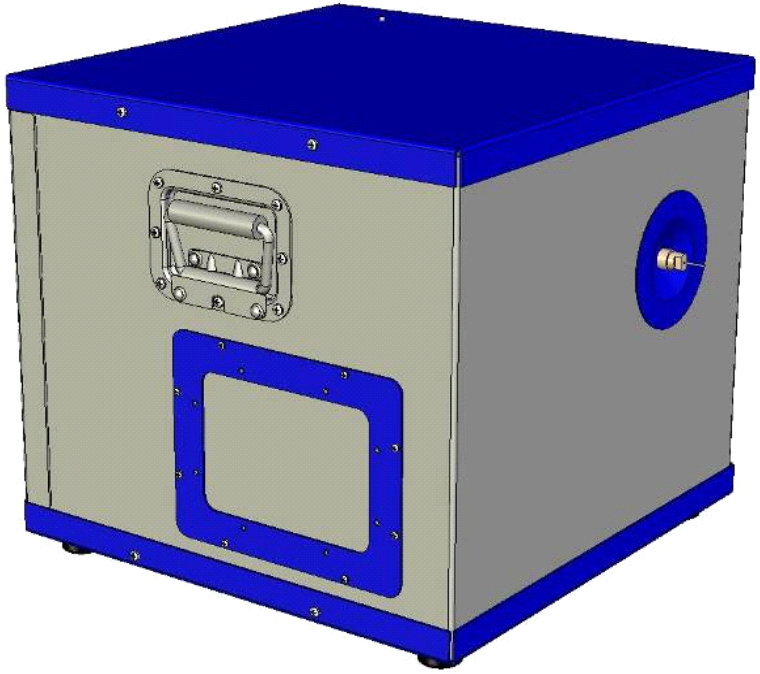

b)

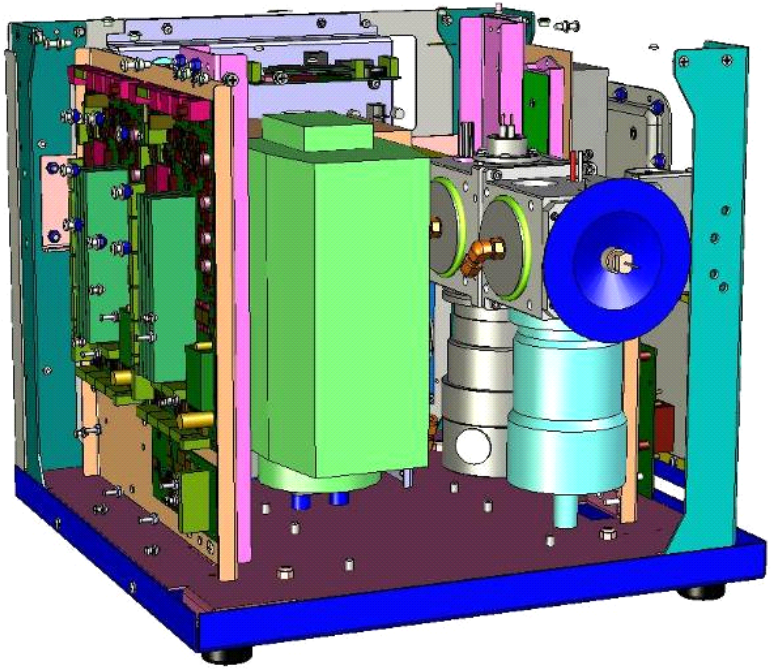

Griffin API future directions

griffin analytical

Miniaturized DART gun and controller

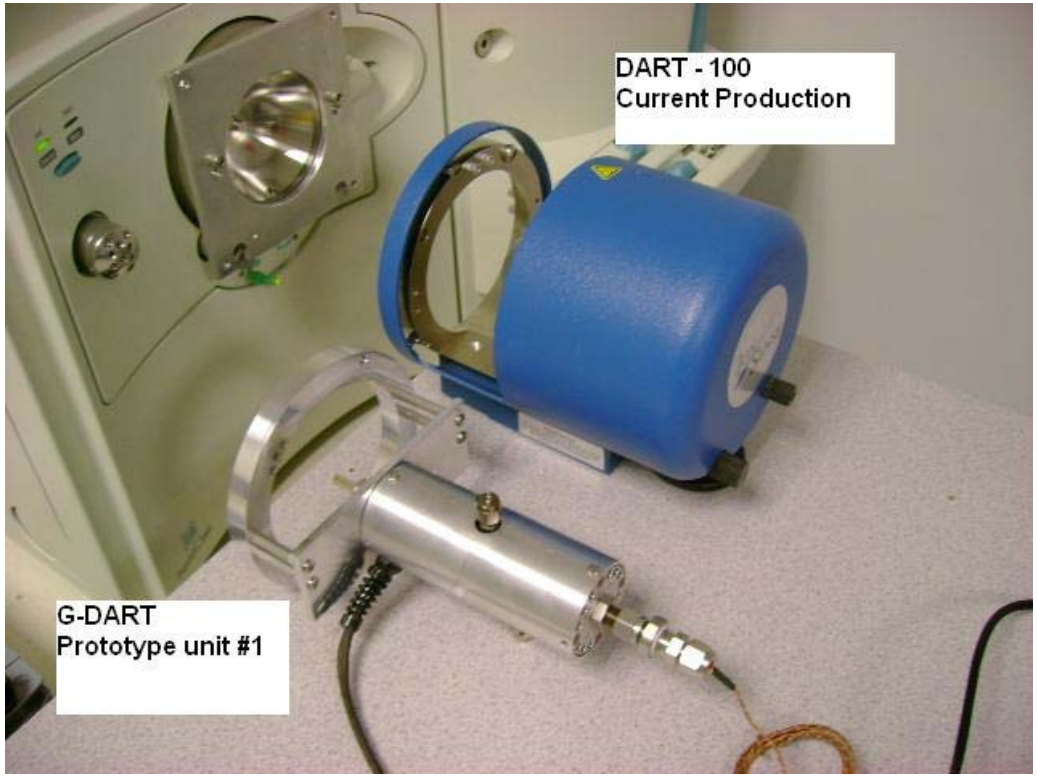

- smaller form factor gun
- 24 V operation
- Optimized for nitrogen
- single PCB controller
- Includes Gas/Ion Separator

Conclusions

- Griffin has field portable GC/MS/MS and direct-sampling MS/MS systems for homeland security applications
- Development of atmospheric pressure sampling systems are underway to leverage novel new ionization sources
- A mobile API-equipped instrument has been constructed
- Preliminary data with ESI, DART, and DESI have been acquired for a variety of compound classes

Acknowledgements

- The Griffin engineering and science teams for assistance with this work
- Ryan Danell (Danell Consulting) and Metacomp Technologies
- Brian Musselman, Joe Tice, and Doug Simmons from IonSense
- Brian Laughlin and Justin Wiseman from Prosolia
- Nari Talaty, Chris Mulligan, and Graham Cooks from Purdue University
- Griffin thanks the National Science Foundation (Grant 0450512) and Air Force Research Labs (Contract FA8650-06-C-5914) for financial support.